NPN Medium Power Transistor (Switching)

UMT4401 / SST4401 / MMST4401 / 2N4401

●Features

1) BV_{CEO} < 40V (I_C = 1mA)
2) Complements the UMT4403 / SST4403 / MMST4403 / 2N4403.

●Package, marking, and packaging specifications

Part No.	UMT4401	SST4401	MMST4401	2N4401
Packaging type	UMT3	SST3	SMT3	TO-92
Marking	R2X	R2X	R2X	—
Code	T106	T116	T146	T93
Basic ordering unit (pieces)	3000	3000	3000	3000

●Absolute maximum ratings (Ta = 25℃)

Parameter		Symbol	Limits	Unit
Collector-base voltage		V_{CBO}	60	V
Collector-emitter voltage		V_{CEO}	40	V
Emitter-base voltage		V_{EBO}	6	V
Collector current		I_C	0.6	A
Collector power dissipation	UMT4401 SST4401 MMST4401	P_C	0.2	W
	2N4401		0.625	
Junction temperature		Tj	150	℃
Storage temperature		Tstg	−55～+150	℃

●External dimensions (Units : mm)

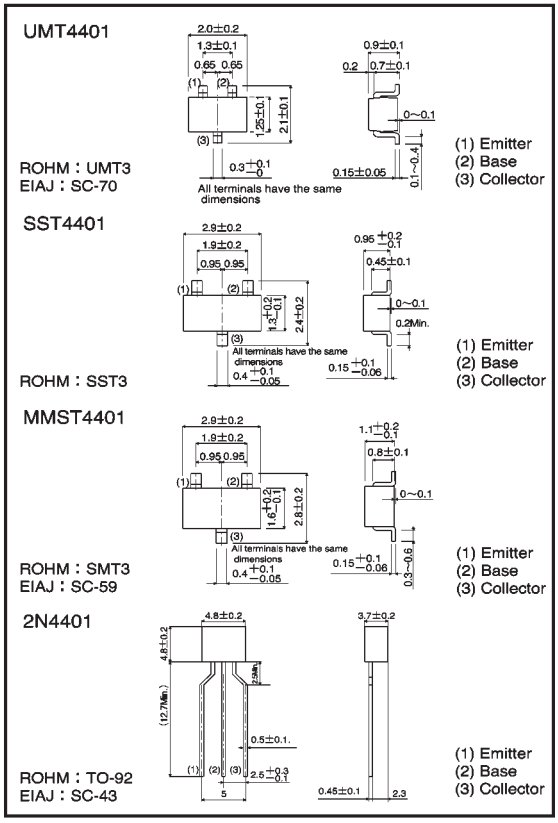

●Electrical characteristics (Ta = 25℃)

Parameter	Symbol	Min.	Typ.	Max.	Unit	Conditions
Collector-base breakdown voltage	BV_{CBO}	60	—	—	V	I_C = 100 μA
Collector-emitter breakdown voltage	BV_{CEO}	40	—	—	V	I_C = 1mA
Emitter-base breakdown voltage	BV_{EBO}	6	—	—	V	I_E = 100 μA
Collector cutoff current	I_{CBO}	—	—	0.1	μA	V_{CB} = 35V
Emitter cutoff current	I_{EBO}	—	—	0.1	μA	V_{EB} = 5V
Collector-emitter saturation voltage	$V_{CE(sat)}$	—	—	0.4	V	I_C/I_B = 150mA/15mA
		—	—	0.75		I_C/I_B = 500mA/50mA
Base-emitter saturation voltage	$V_{BE(sat)}$	—	—	0.95	V	I_C/I_B = 150mA/15mA
		—	—	1.2		I_C/I_B = 500mA/50mA
DC current transfer ratio	h_{FE}	20	—	—	—	V_{CE} = 1V , I_C = 0.1mA
		40	—	—		V_{CE} = 1V , I_C = 1mA
		80	—	—		V_{CE} = 1V , I_C = 10mA
		100	—	300		V_{CE} = 1V , I_C = 150mA
		40	—	—		V_{CE} = 2V , I_C = 500mA
Transition frequency	f_T	250	—	—	MHz	V_{CE} = 10V , I_E = −20mA, f = 100MHz
Collector output capacitance	Cob	—	—	6.5	pF	V_{CB} = 10V , f = 100kHz
Emitter input capacitance	Cib	—	—	30	pF	V_{EB} = 0.5V , f = 100kHz
Delay time	td	—	—	15	ns	V_{CC} = 30V , $V_{EB(OFF)}$ = 2V , I_C = 150mA , I_{B1} = 15mA
Rise time	tr	—	—	20	ns	V_{CC} = 30V , $V_{EB(OFF)}$ = 2V , I_C = 150mA , I_{B1} = 15mA
Storage time	tstg	—	—	225	ns	V_{CC} = 30V , I_C = 150mA , I_{B1} = −I_{B2} = 15mA
Fall time	tf	—	—	30	ns	V_{CC} = 30V , I_C = 150mA , I_{B1} = −I_{B2} = 15mA

●Electrical characteristic curves

Refer to pages 621 to 623 for the same UMT2222A/SST2222A/MMST2222A/PN2222A.

(SPEC-C31)