Figure 1

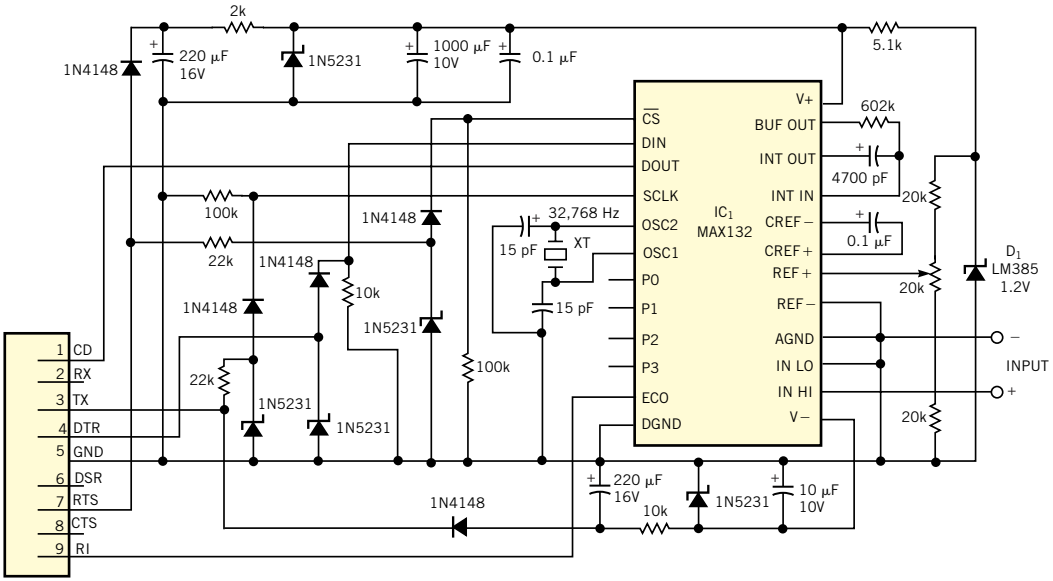

You can use a PC's serial port to communicate with an 18-bit A/D converter.