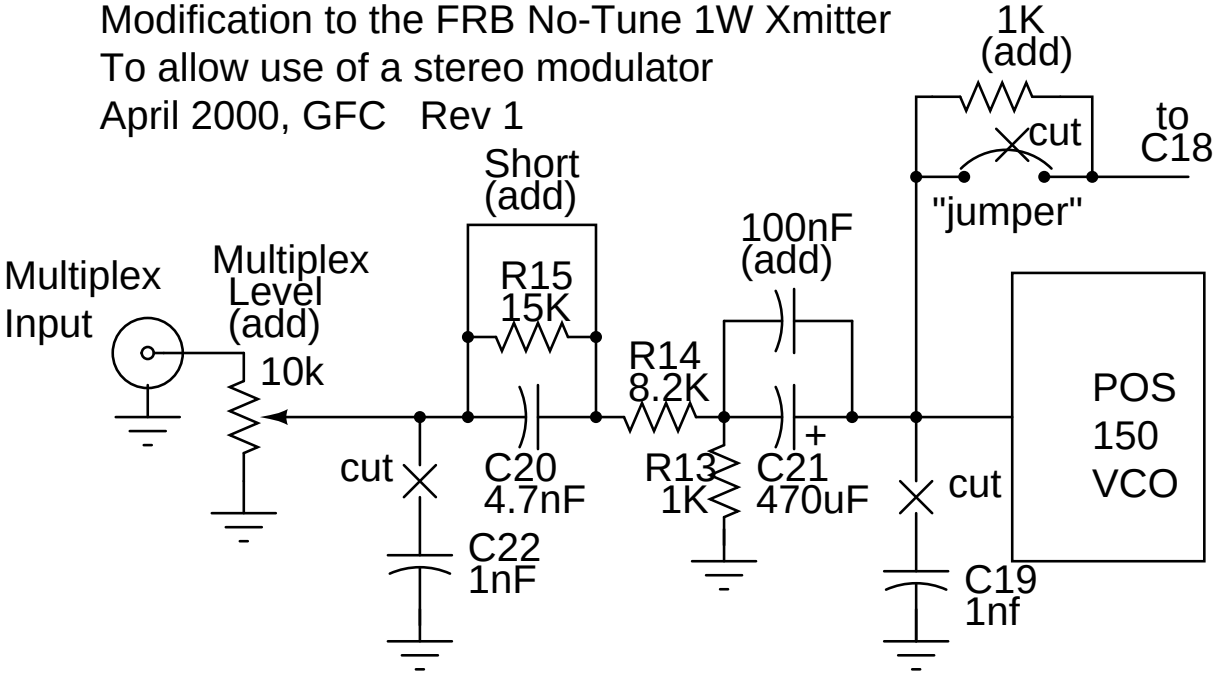Modification to the FRB No-Tune 1W Xmitter
To allow use of a stereo modulator
April 2000, GFC Rev 1