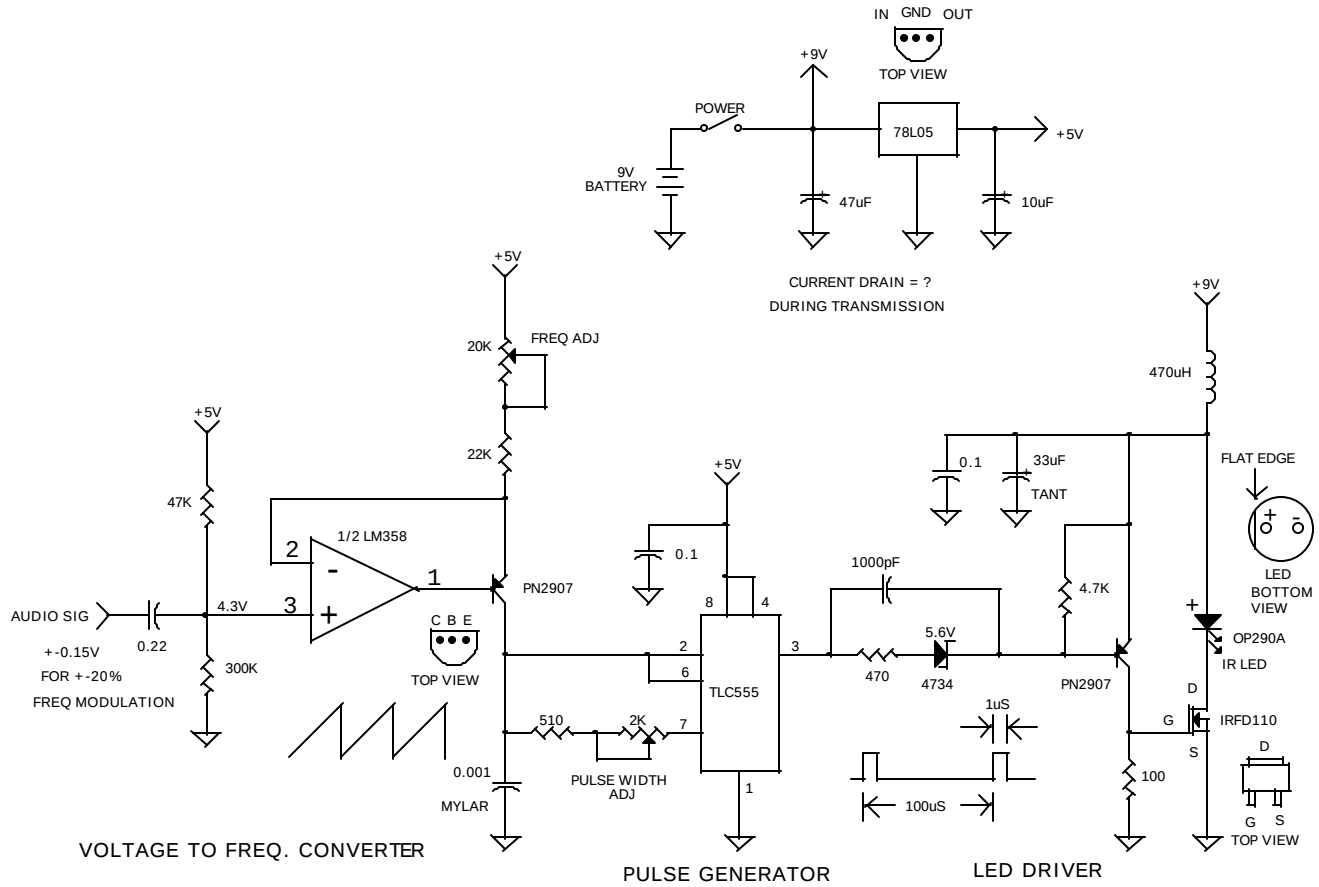

DRAWN BY: DAVE JOHNSON

OPTICAL THROUGH THE AIR TRANSMITTER

V TO F CONVERTER + 1uS PULSE GEN + LED DRIVER

DAVID JOHNSON AND ASSOCIATES OPTICAL THROUGH-THE-AIR TRANSMITTER V TO F CONVERTER + 1uS PULSE GEN + LED DRIVER		
Size B	Document Number VOICEX2.DSN	Rev A
Date: Monday, March 22, 1999	Sheet 1 of 1	